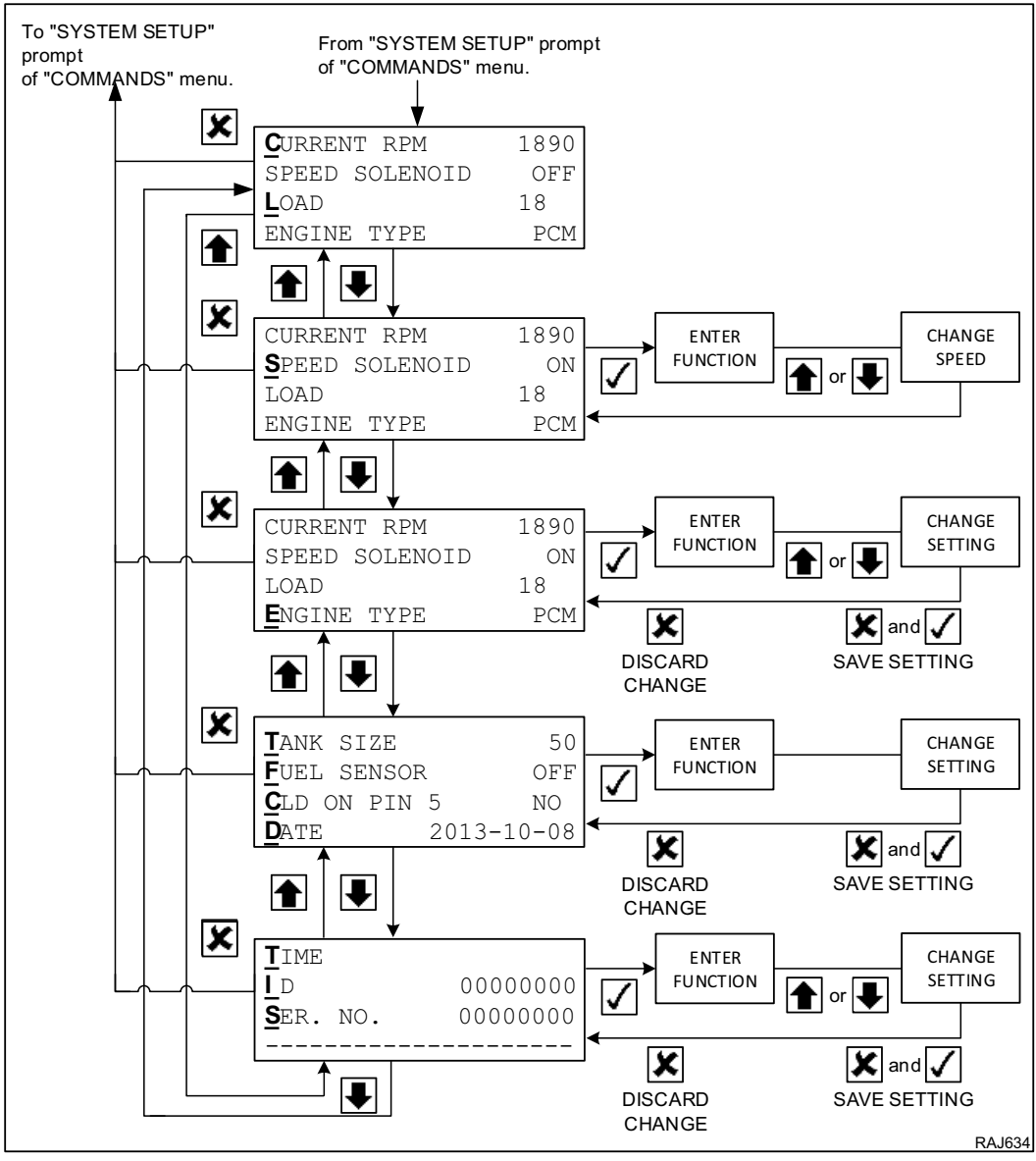
To "SYSTEM SETUP" prompt of "COMMANDS" menu.
From "SYSTEM SETUP" prompt of "COMMANDS" menu.
CURRENT RPM 1890
SPEED SOLENOID OFF
LOAD 18
ENGINE TYPE PCM
CURRENT RPM 1890
SPEED SOLENOID ON
LOAD 18
ENGINE TYPE PCM
ENTER FUNCTION
or
CHANGE SPEED
CURRENT RPM 1890
SPEED SOLENOID ON
LOAD 18
ENGINE TYPE PCM
ENTER FUNCTION
or
CHANGE SETTING
DISCARD CHANGE
and
SAVE SETTING
TANK SIZE 50
FUEL SENSOR OFF
CLD ON PIN 5 NO
DATE 2013-10-08
ENTER FUNCTION
CHANGE SETTING
DISCARD CHANGE
and
SAVE SETTING
TIME
ID 00000000
SER. NO. 00000000
ENTER FUNCTION
or
CHANGE SETTING
DISCARD CHANGE
and
SAVE SETTING
RAJ634