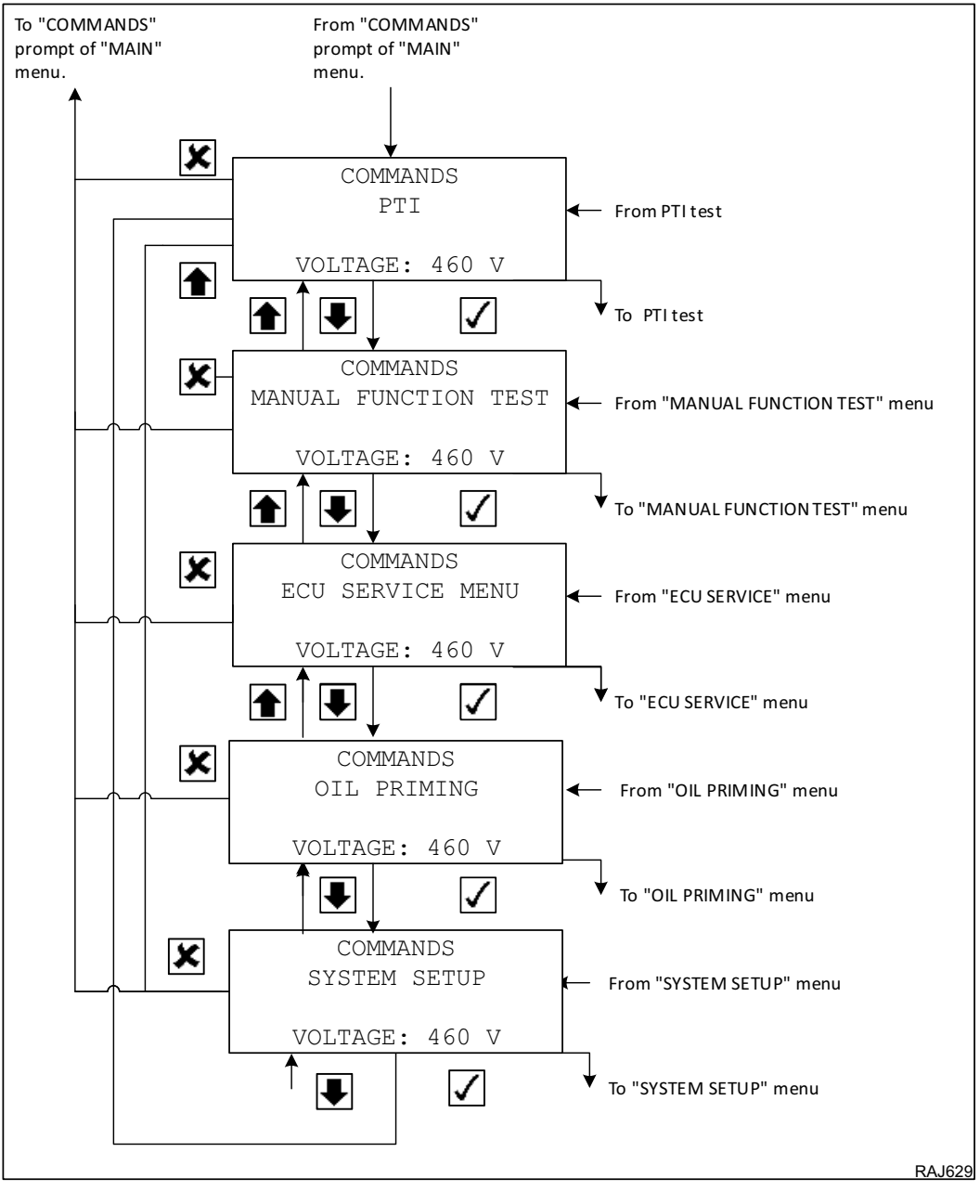
To "COMMANDS" prompt of "MAIN" menu.
From "COMMANDS" prompt of "MAIN" menu.
COMMANDS
PTI
VOLTAGE: 460 V
From PTI test
To PTI test
COMMANDS
MANUAL FUNCTION TEST
VOLTAGE: 460 V
From "MANUAL FUNCTION TEST" menu
To "MANUAL FUNCTION TEST" menu
COMMANDS
ECU SERVICE MENU
VOLTAGE: 460 V
From "ECU SERVICE" menu
To "ECU SERVICE" menu
COMMANDS
OIL PRIMING
VOLTAGE: 460 V
From "OIL PRIMING" menu
To "OIL PRIMING" menu
COMMANDS
SYSTEM SETUP
VOLTAGE: 460 V
From "SYSTEM SETUP" menu
To "SYSTEM SETUP" menu
RAJ629