LEGEND		
CODE	DESCRIPTION	LOC
AVL	AIR VENT LOGGIN	6D
BAT	BATTERY	4C
CB1	CKT BREAKER - MAIN	3B
CC1	COMPRESSOR CONTACTOR	4A
CFM	CONDENSER FAN MOTOR	7A
COMP	COMPRESSOR MOTOR	4A
DCV	DIGITAL CONTROL VALVE	6D
EFM 1,2 &3	EVAPORATOR FAN MOTORS	6A,7A
F3	FUSE - 20 AMP	5B
F4	FUSE - 20 AMP	5B
F5	FUSE - 20 AMP	5B
HP	HIGH PRESSURE TRANSDUCER	6D
HPS	LOW PRESSURE CUT OFF SWITCH	4B
K1	RELAY - PHASE SELECT #1	4B
K2	RELAY - PHASE SELECT #2	4B
LP	LOW PRESSURE TRANSDUCER	6D
LPS	LOW PRESSURE CUT OFF SWITCH	7D
MP	MICRO PROCESSOR	6B,7B
S1	SOL. STATE RELAY - EVAP HEATERS	6B
S2	SOL. STATE RELAY - EFM1	6B
S3	SOL. STATE RELAY - EFM2	7B
S4	SOL. STATE RELAY - CFM	7B
TFO	TRANSFRESH OPTION	3C
T1	TRANSFORMER	3B
VIV	VAPOR INJECTION VALVE	7D

REVISIONS				
CHANGE NOTICE	REV	DESCRIPTION	DATE	APPROVED
520220	A	RELEASED	07-Oct-08	OT
537225	B	ADDED 4-POLE MONITORING OPTION	19-Nov-09	OT
543622	C	L2 WAS L3,CONNECTED WITH CB1 L2	17-Jun-10	OT
550908	D	COLOR CODE OF GAS SENSOR UPDATED	18-Jan-11	OT
558428	E	COLOR CODE OF GAS SENSOR & AFAM ACTUATOR TERMINALS UPDATED.	17-Mar-11	OT
537793	F	ADDED NEW HUMUDITY SENSOR RS485	02-Nov-11	OT
600025	G	CHART RECORDER OPTION REMOVED. GAS SENSOR SHAPE UPDATED. HIGH CAPACITY HEATER OPTION ADDED	07-Feb-12	OT
764115	H	SWAPPED THE COLORS OF THE PIN# 1 & 3 OF THE J1 CONNECTOR	07-Feb-12	OT
1319389	J	UPDATED TERMINAL CONNECTION FOR CONDENSER FAN MOTOR	07-Dec-18	LS
1329139	K	UPDATED CABLE COLOR CODING 3-HEATER VERSION	18-Dec-18	M FERRER

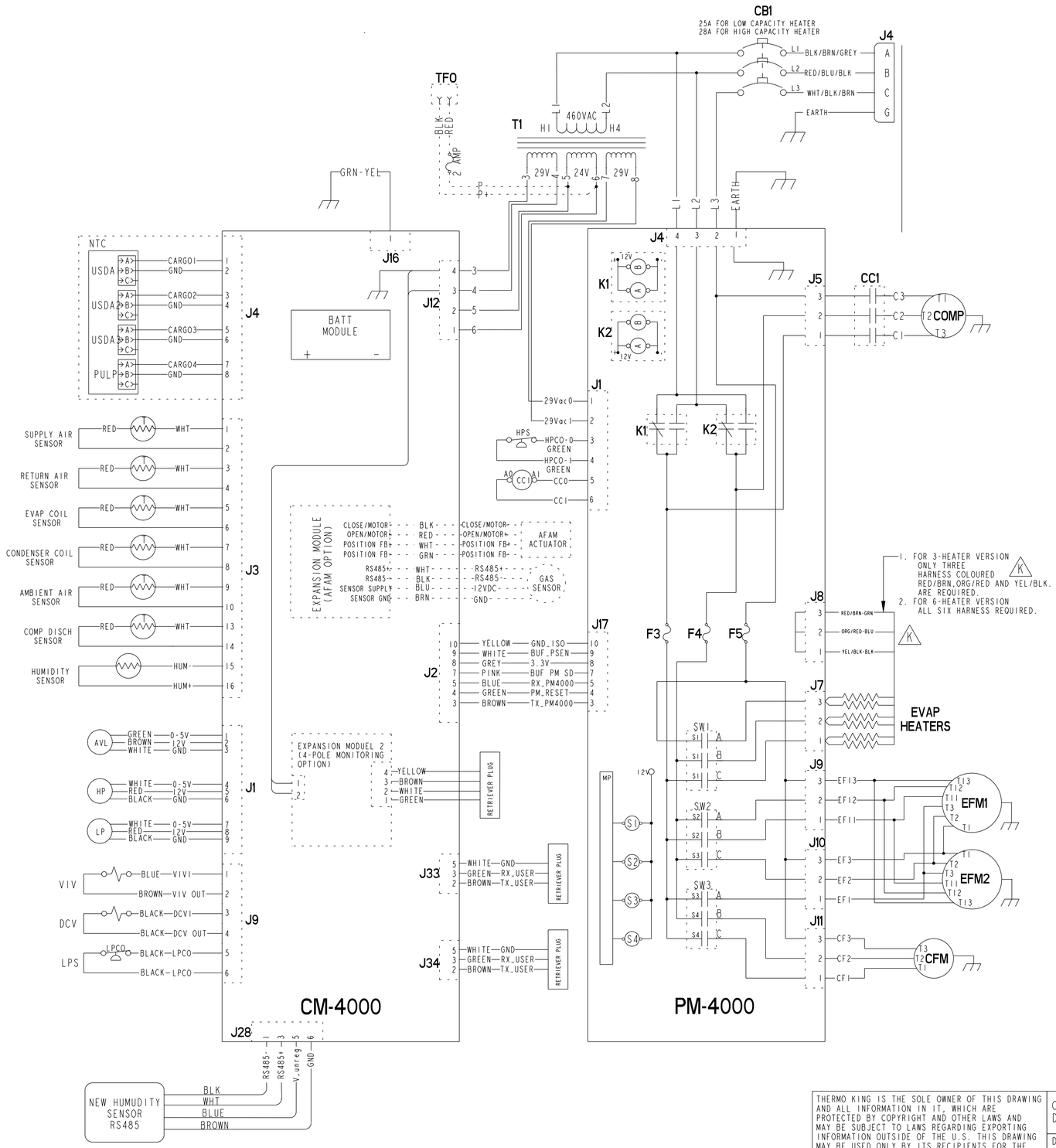

THERMO KING IS THE SOLE OWNER OF THIS DRAWING AND ALL INFORMATION IN IT, WHICH ARE PROTECTED BY COPYRIGHT AND OTHER LAWS AND MAY BE SUBJECT TO LAWS REGARDING EXPORTING INFORMATION OUTSIDE OF THE U.S. THIS DRAWING MAY BE USED ONLY BY ITS RECIPIENTS FOR THE PURPOSE FOR WHICH IT IS PROVIDED AND ONLY BY THE RECIPIENT, WHO AGREES THAT IT WILL NOT, WITHOUT THERMO KING'S PRIOR WRITTEN PERMISSION; 1) DISCLOSE NOR USE THIS DRAWING OR THE INFORMATION IN IT EXCEPT AS SPECIFIED ABOVE; OR 2) MAKE ANY COPIES OF OR EXTRACTS, REVISIONS, OR UPDATES FROM THE DRAWING. ALL COPIES MUST BE RETURNED TO THERMO KING UPON COMPLETION OF THE WORK FOR WHICH THEY HAVE BEEN PROVIDED OR UPON ANY EARLIER REQUEST.

CAD GENERATED DRAWING, DO NOT MANUALLY UPDATE

DRAWN	GG	07-Oct-08
CHECKED	R RAJ	07-Oct-08
APPROVED	OT	07-Oct-08
ENG APPVL	-	-

THERMO KING

TITLE
SCHEMATIC
MAGNUM MP 4000

SIZE	CODE IDENT NO	DWG NO	REV
A1		IE54052	K

SIZE: NONE REF DWG: SHEET 1 OF 1